PLAN TEHNIC | 1:1.88

PLACA DE PRINDERE / DIMSTYLE + DIMASSOC v1.2

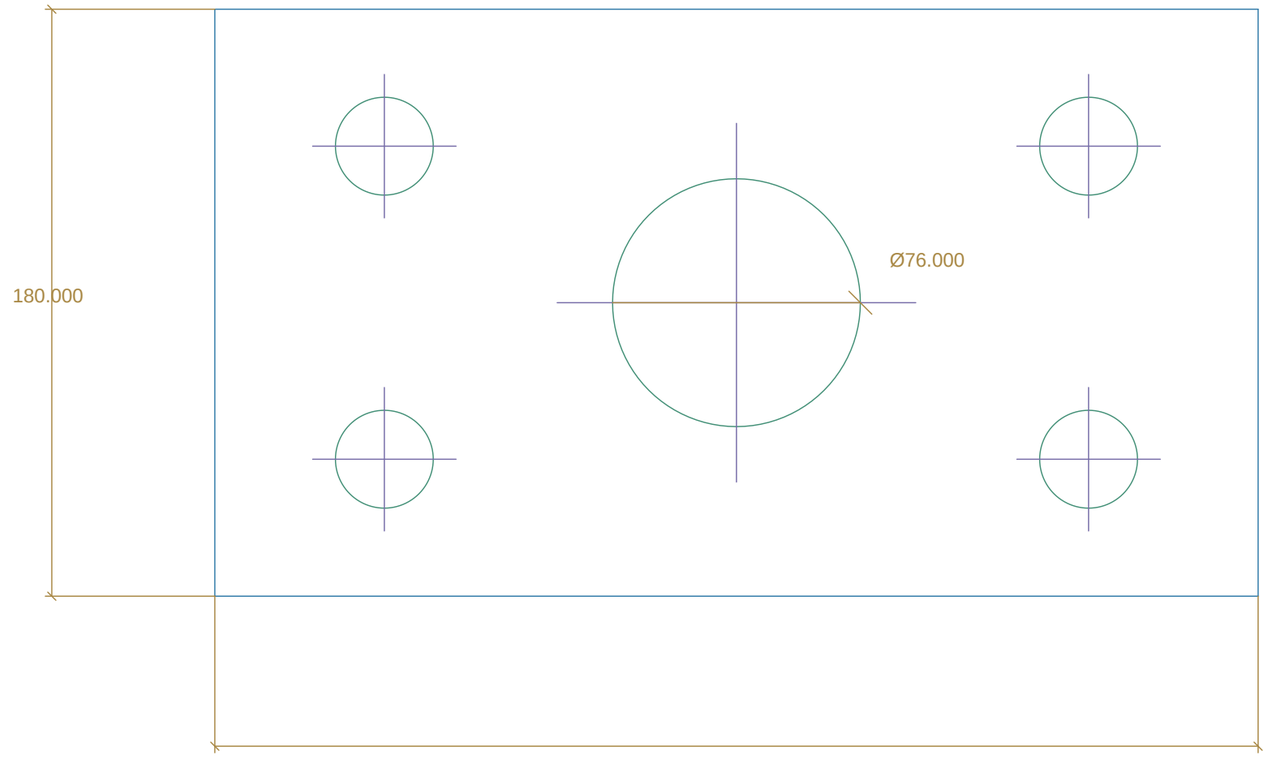

DIMSTYLE: Mecanica ISO

Precision: 3 decimals

Text 6 mm / Arrow 2.2 mm

DIMASSOC: LINE/PLINE/CIRCLE

Edit source => DIM updates

Delete source => warning !

DXF: vector geometry

Dimensiuni in mm / Cote legate de LINE si CIRCLE

NEXCAD v1.2 / ASOCIATIVITATE + DIMSTYLE NEXCAD PROFESSIONAL | PROIECT TEHNIC	PROIECTANT: NEXCAD	REV: A
	PLANSA: Plan tehnic v1.2	SCARA 1:AUTO