PLACA DE PRINDERE / DIMSTYLE + DIMASSOC v1.2

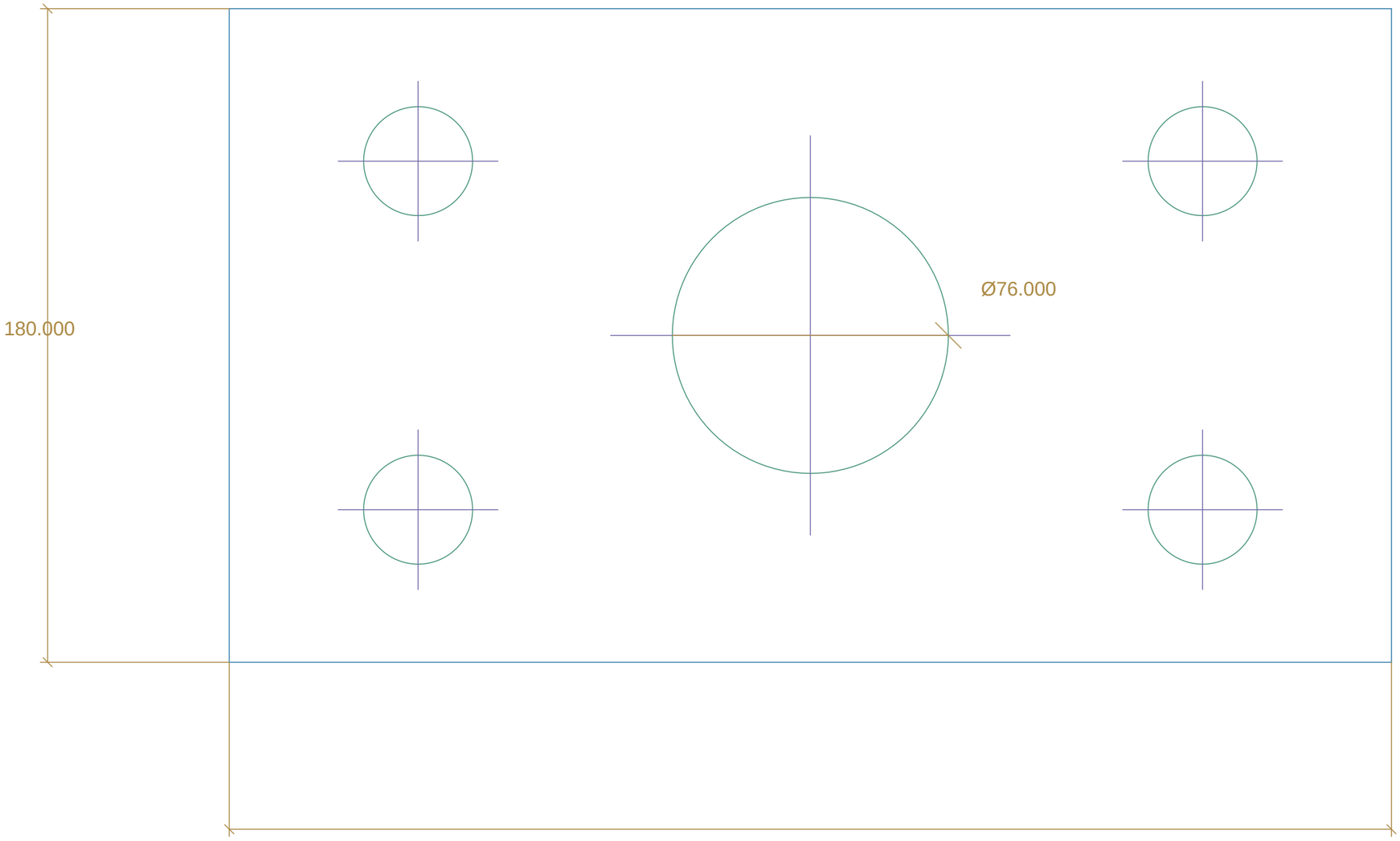

DIMSTYLE: Mecanica IS

Precision: 3 decimals

Text 6 mm / Arrow 2.2 mm

DIMASSOC: LINE/PLINE/CIRC

Edit source => DIM updates

Delete source => warning !

DXF: vector geometry

Dimensiuni in mm / Cote legate de LINE si CIRCLE